GENERAL NOTES:

1. ALL WORK AND MATERIALS TO CONFORM WITH THE CURRENT LOCAL MUNICIPAL, PROVINCIAL, & FEDERAL STANDARDS, INCLUDING THE NATIONAL PLUMBING CODE, WITH MOST STRINGENT STANDARD SHALL APPLY.
2. THE CONTRACTOR IS RESPONSIBLE FOR OBTAINING ANY/ALL ADDITIONAL PERMITS REQUIRED BY THE LOCAL, PROVINCIAL, OR FEDERAL GOVERNMENTS.
3. CONTRACTOR IS RESPONSIBLE TO CONTACT ALBERTA ONE CALL AT 1-800-242-3447 AND SHAW CABLE AT 1-866-344-7429 TO HAVE ALL UTILITIES WITHIN THE CONSTRUCTION VICINITY LOCATED PRIOR TO ANY CONSTRUCTION COMMENCING.
4. CONTRACTOR IS RESPONSIBLE FOR CONTACTING CONSULTANT & ENGINEER PRIOR TO COMMENCING ANY SITE WORKS.
5. ALL DIMENSIONS ARE IN METERS AND DECIMALS THEREOF.
6. ALL ELEVATIONS ARE GEODETIC.
7. ALL GRADES ARE TO FINISHED GRADE.
8. PRIOR TO COMMENCING CONSTRUCTION WORK, THE CONTRACTOR SHALL INSPECT FIELD CONDITIONS, OBTAIN AND CONFIRM ACTUAL SITE DIMENSIONS AND EXAMINE SURFACE CONDITIONS AS REQUIRED TO ENSURE CORRECT EXECUTION OF THE WORK. COMMENCEMENT OF CONSTRUCTION BY THE CONTRACTOR CONSTITUTES ACCEPTANCE OF EXISTING CONDITIONS AND MEANS DIMENSIONS HAVE BEEN CONSIDERED, VERIFIED, AND ARE ACCEPTABLE.
9. ALL DESIGN ELEVATIONS AND DIMENSIONS TO BE FIELD VERIFIED BY THE CONTRACTOR, AT THE TIME OF CONSTRUCTION LAYOUT SURVEY. ANY DISCREPANCIES ARE TO BE REPORTED TO NICHOLS ENVIRONMENTAL IN WRITING IMMEDIATELY.
10. THE CONTRACTOR IS TO PROVIDE ONLY NEW MATERIALS TO BE INCORPORATED IN THE WORK.
11. CONTRACTOR TO ENSURE THAT PROPOSED TIE-IN METHODS ARE APPROVED BY THE ENGINEER PRIOR TO COMMENCING CONSTRUCTION.
12. CONTRACTOR IS RESPONSIBLE FOR DAMAGE TO ANY EXISTING FACILITIES, STRUCTURES, AND LANDSCAPING WITHIN OR ADJACENT TO THE CONSTRUCTION BOUNDARY PRIOR TO SUBSTANTIAL COMPLETION. THE CONTRACTOR WILL BE RESPONSIBLE FOR REPAIRING ANY DAMAGED INFRASTRUCTURE TO THE SATISFACTION OF THE VILLAGE OF SPRING LAKE OR THE ENGINEER.
13. THE CONTRACTOR WILL BE RESPONSIBLE TO REMOVE AND REPLACE, AT THEIR COST, REJECTED OR DEFECTIVE WORK, AS DIRECTED BY THE OWNER, OR THE ENGINEER.
14. CONTRACTOR IS RESPONSIBLE FOR HAULING ALL EXCESS MATERIAL OFFSITE.
15. CONTRACTOR IS RESPONSIBLE FOR GENERAL SITE CLEANUP.
16. CONTRACTOR TO DISPOSE OF ALL REMOVED MATERIAL.
17. DAILY CLEANUP OF MUD TRACKING IS CONTRACTOR'S RESPONSIBILITY.
18. FOR ANY WORK COMPLETED ON LOCAL MUNICIPAL PROPERTY, THE CONTRACTOR MUST NOTIFY THE APPROPRIATE DIVISION OF THE MUNICIPALITY, A MINIMUM OF 48 HOURS PRIOR TO COMMENCING ANY WORK. APPLICABLE MUNICIPAL INSPECTORS MUST BE PRESENT FOR ANY WORK COMPLETED ON LOCAL MUNICIPAL PROPERTY.
19. ALL SITE TRAFFIC CONTROL SIGNAGE TO BE PROVIDED BY CONTRACTOR.
20. THE CONTRACTOR MUST NOTIFY THE ENGINEER, IN WRITING, IF SUBSURFACE CONDITIONS AT THE SITE DIFFER FROM THOSE PREVIOUSLY INDICATED.
21. MATERIAL TESTING AND ACCEPTANCE FOR, BUT NOT LIMITED TO, GRADING, UTILITY INSTALLATION, SUBGRADE, AGGREGATES, ASPHALT, AND CONCRETE TO BE AS DIRECTED BY THE ENGINEER. CONTRACTOR IS RESPONSIBLE FOR CONTACTING THE ENGINEER PRIOR TO COMMENCING ANY CONSTRUCTION WORK AND WITHIN 48 HOURS OF ANY REQUIRED MATERIAL TESTING.
22. ALL AGGREGATES MUST BE APPROVED BY THE ENGINEER. NO GRANULAR MATERIAL SHALL BE PLACED UNTIL APPROVED BY THE ENGINEER.
23. CONSTRUCTION OF ASPHALT PAVING TO BE IN ACCORDANCE WITH LOCAL MUNICIPALITY SPECIFICATIONS.
24. REFER TO TENDER DOCUMENTS FOR PAVEMENT STRUCTURE RECOMMENDATION.
25. SUBGRADE STABILIZATION TO BE AS DIRECTED BY THE ENGINEER.
26. EXISTING ASPHALT/ ROAD BASE/ CONCRETE/ CURB & GUTTER MUST BE SAW CUT AT TIE-IN POINTS.
27. ALL TIE-INS TO EXISTING VILLAGE OF SPRING LAKE INFRASTRUCTURE MUST BE COMPLETED TO THE SATISFACTION OF THE VILLAGE OF SPRING LAKE.
28. THE CONTRACTOR SHALL INSTALL EROSION CONTROL FEATURES SUCH AS DITCHES, SILT FENCES, AND PROTECTION FOR CATCH BASINS AND MANHOLES, AS REQUIRED TO PREVENT DAMAGE TO PROPERTY OR SEDIMENT RUNOFF.
29. CONTRACTOR IS TO PRACTICE GOOD HOUSEKEEPING TECHNIQUES WITH REGARDS TO STORM WATER RUN-OFF. ALL WATER IS TO BE CONTROLLED WITHIN CONSTRUCTION BOUNDARIES BY MEANS OF DITCHES AND EROSION CONTROL SYSTEMS (BERMS, BALES, SILT FENCES). SILT FENCES AND, WHERE NECESSARY, TEMPORARY SILTATION PONDS, ARE TO BE USED WHERE ANY STORM WATER RUN-OFF IS LEAVING THE CONSTRUCTION AREA.
30. THE CONTRACTOR SHALL BE RESPONSIBLE FOR PROVIDING TEMPORARY DRAINAGE AND PUMPING FACILITIES TO KEEP EXCAVATIONS AND WORK SITE FREE FROM STANDING WATER.
31. CONTRACTOR TO ENSURE THAT ALL FINISHED GRADES TO BE WITHIN 50mm OF DESIGN FINISHED GRADES.
32. MINIMUM FINISHED SLOPE ON ASPHALT IS 1.0%, MINIMUM FINISHED SLOPE ON LANDSCAPING IS 1.5%.
33. ALL DITCHES AND LANDSCAPE AREAS TO CONTAIN A MINIMUM OF 150mm TOPSOIL AND SHOULD BE SEEDED WITH APPROVED GRASS BLEND.
34. CONTRACTOR TO ENSURE POSITIVE DRAINAGE TO DISTURBED LANDSCAPED AREAS.
35. ALL PAVEMENT MARKINGS TO BE APPLIED WITH TWO (2) COATS OF PAINT USING MECHANICAL EQUIPMENT AT MANUFACTURER RECOMMEND RATE.
36. SUBSTANTIAL PERFORMANCE SHALL BE IN ACCORDANCE WITH THE BUILDERS' LIEN ACT, CURRENT EDITION.
37. DURING THE SUBSTANTIAL COMPLETION INSPECTION, A LIST OF DEFICIENCIES AND DEFECTS WILL BE NOTED. THERE WILL BE A HOLDBACK IN THE AMOUNT OF 150% OF THE VALUE OF THE REMAINING DEFICIENCIES RETAINED UNTIL ALL OF THE DEFICIENCIES ARE CORRECTED TO THE SATISFACTION OF THE VILLAGE OF SPRING LAKE OR THE ENGINEER.
38. EXISTING AND PROPOSED GAS, POWER, TELEPHONE, CABLE TV, FIBRE OPTIC LINE AND LIGHTING, BY OTHERS.
39. CONTRACTOR TO DISPOSE OF ALL REMOVED MATERIAL IN ACCORDANCE WITH LOCAL MUNICIPALITY OR PROVINCIAL LAWS.
40. CONTRACTOR TO PROVIDE ENGINEER WITH AS-BUILT GRADING & UTILITIES PLAN AT COMPLETION OF CONSTRUCTION.
41. CONTRACTOR TO ADD GRANULAR BASE COURSE AS REQUIRED TO ENSURE A SMOOTH TIE-IN TRANSITION FROM EXISTING PRIVATE DRIVEWAYS AND PROPOSED ROADWAY OVERLAY.

STORM SEWERS:

1. ALL WORK AND MATERIALS TO CONFORM WITH THE CURRENT LOCAL MUNICIPAL, PROVINCIAL & FEDERAL STANDARDS, INCLUDING THE NATIONAL PLUMBING CODE, MOST STRINGENT STANDARD SHALL APPLY.
2. ALL CONCRETE FOR PIPES, MANHOLES AND UNDERGROUND RELATED CONSTRUCTION ITEMS, SHALL BE SULFATE RESISTANT CONCRETE (TYPE 50), CONFORMING TO CURRENT LOCAL MUNICIPAL STANDARDS.
3. ALL MANHOLES TO HAVE BENCHED, SMOOTH FLOW CHANNELS, AS PER LOCAL MUNICIPAL STANDARDS.
4. ALL MANHOLE FRAMES AND COVERS TO BE CAST IRON AS PER LOCAL MUNICIPAL STANDARDS, UNLESS OTHERWISE SPECIFIED.
5. ALL MANHOLES TO BE PRECAST1200mm DIAMETER, COMPLETE WITH FRAMES AND GRATES, CONFORMING TO LOCAL MUNICIPAL STANDARDS, UNLESS OTHERWISE SPECIFIED.
6. SEWER PIPE BEDDING SHALL BE AS PER LOCAL MUNICIPAL STANDARDS, UNLESS OTHERWISE SPECIFIED. WHERE EXISTING GROUND/GROUNDWATER CONDITIONS ARE UNSUITABLE FOR STANDARD BEDDING, MODIFIED METHODS ARE TO BE USED AS INSTRUCTED BY THE ENGINEER.
7. ALL STORM SEWERS UP TO 600mm DIAMETER SHALL BE SDR-35 PVC SMOOTH WALL, OR ULTRA RIB, UNLESS OTHERWISE SPECIFIED, AS PER LOCAL MUNICIPAL STANDARDS.
8. ALL MANHOLE EXCAVATIONS TO BE BACKFILLED PER LOCAL MUNICIPAL STANDARDS, OR AS DIRECTED BY THE ENGINEER.
9. FOR CONSTRUCTION DETAILS NOT SHOWN ON THE PLANS, REFERENCE SHALL BE MADE TO THE LOCAL MUNICIPAL STANDARD DRAWINGS AND SPECIFICATIONS.
10. THE CONTRACTOR IS TO PROVIDE CCTV CAMERA INSPECTIONS OF ALL STORM SEWERS, INCLUDING PICTORIAL REPORT AND TWO (2) DVD DISCS IN A FORMAT SATISFACTORY TO THE ENGINEER. ALL SEWERS ARE TO BE FLUSHED PRIOR TO CAMERA INSPECTION.
11. CONTRACTOR TO VERIFY THE LOCATION AND INVERT OF ALL EXISTING MAINS PRIOR TO COMMENCING CONSTRUCTION. ANY DISCREPANCIES TO BE REPORTED TO THE ENGINEER IMMEDIATELY.
12. STORM MAINS MUST HAVE MINIMAL HORIZONTAL AND VERTICAL CLEARANCES IN ACCORDANCE WITH LOCAL MUNICIPAL & PROVINCIAL GUIDELINES AND THE APPLICABLE BUILDING AND PLUMBING CODES.
13. CONTRACTOR TO INFORM LOCAL MUNICIPALITY 72 HOURS PRIOR TO COMMENCING CONSTRUCTION ON PUBLIC RIGHT-OF-WAY.
14. LENGTHS SHOWN ARE FROM CENTER OF MANHOLE TO CENTER OF MANHOLE.
15. SURFACE CONTRACTOR IS RESPONSIBLE TO ADJUST ALL MANHOLES TO MATCH FINISHED SURFACE ELEVATIONS.
16. ALL STORM PIPE WITH LESS THAN 1.5m COVER TO BE INSULATED FOR FROST PROTECTION.
17. ALL CULVERT ENDS TO HAVE RIP-RAP PROTECTION PER MUNICIPAL DETAILS.

ASPHALT OVERLAY/WIDENING STRUCTURE OPTIONS

SUBGRADE PREP

1. SUBGRADE SHOULD BE PROOF ROLLED PRIOR TO STABILIZATION AND AFTER FINAL COMPACTION. ENGINEER TO PROVIDE NECESSARY RECOMMENDATIONS BASED ON PROOF ROLL OBSERVATIONS.
2. ALL ORGANIC SOIL AND FILL WITH MODERATE TO HIGH ORGANIC CONTENT PRESENT AT SURFACE WITHIN THE ROAD WIDENING AREA SHOULD BE REMOVED TO THE SATISFACTION OF THE ENGINEER. FIELD JUDGEMENT WILL BE REQUIRED TO DETERMINE EXTENT OF ORGANIC SOIL REMOVAL.
3. SUBGRADE SHOULD BE SCARIFIED AND COMPACTED TO 100 PERCENT OF THE STANDARD PROCTOR DENSITY TO A MINIMUM DEPTH OF 150mm.

NONE STAGED PAVEMENT STRUCTURE

-ASPHALTIC CONCRETE	75mm (10mm-LT)
-CRUSHED GRAVEL (3-20)	225mm
-HIGH STRENGTH GEOTEXTILE	Mirafi RS380i OR EQUIVALENT

1. 10mm-LT = CITY OF EDMONTON ASPHALTIC CONCRETE MIX TYPE 10mm - LOW TRAFFIC OR EQUIVALENT
2. 3-20 = CITY OF EDMONTON DESIGNATION 3 CLASS 20 AGGREGATE OR EQUIVALENT
3. ALL GRANULAR BASE MATERIAL SHOULD BE COMPACTED TO 100 PERCENT OF THE STANDARD PROCTOR DENSITY IN MAXIMUM 150mm LIFTS.

DESCRIPTIONS:

APP	APPROACH	LS	LIGHT STANDARD
BC	BEGINNING OF CURVE	MH	MANHOLE
BH	BOREHOLE	OG	ORIGINAL GROUND
BOB	BOTTOM OF BANK	PED	PEDESTAL
C/W	CONNECTED WITH	PL	PROPERTY LINE
CL	CENTERLINE	PP	POWER POLE
CONC	CONCRETE	PWR	POWER
EC	END OF CURVE	RW	RETAINING WALL
ELEV	ELEVATION	R/W	RIGHT OF WAY
EOA	EDGE OF ASPHALT	SPD	STANDARD PROCTOR
EOC	EDGE OF CONCRETE		DENSITY
EOG	EDGE OF GRAVEL	STM	STORM
EOW	EDGE OF WALK	TBS	TOP OF BACK SLOPE
EX	EXISTING	TL	TREELINE
F&C	FRAME AND COVER	TOA	TOP OF ASPHALT
FDI	FOUND IRON PIN	TOG	TOP OF GRAVEL
FL	FENCE LINE	TOB	TOP OF BANK
FUT	FUTURE	TOE	TOE OF BERM/SLOPE
GAS	GAS LOCATES	TOP	TOP OF PILE
GRV	GRAVEL	TP	TRAFFIC LIGHT POLE
GW	GUY WIRE	TRAN	TRANSFORMER
HP	HIGH POINT	URW	UTILITY RIGHT OF WAY
INV	INVERT	WAT	WATER
LP	LOW POINT	WV	WATER VALVE

DRAWING INDEX

DRAWING No.	REV.	DRAWING TITLE
Figure 0	0	Scope of Work and General Notes
Figure 1	0	Area Overview
Figure 2	0	Roadway Grading Plan
Figure 3	0	Roadway Grading Plan
Figure 4	0	Underground Stormwater Plan
Figure 5	0	Parking Lot Overview
Figure 6	0	Lakeside Drive Additional Asphalt Area Overview
Figure 7	0	Lakeside Drive Additional Asphalt Area

REVISION LOG

REV	DATE	DESCRIPTION	DRAF.	CHKD.
A	29-Nov-2023	Issued for Internal Review	JG	DD/MD
0	21-Feb-2024	Issued for Tender	AH	DD/MD

DRAWING TITLE	DRAWN	APPROVED	PROJECT	CLIENT
Scope of Work and General Notes	JG	MD	Road Widening & Drainage Improvements Waters Crescent Spring Lake, Alberta	Village of Spring Lake
	PROJECT	DATE		
	23-131-VSL	21-Feb-2024		
	DRAWING	REVISION		
	Figure 0	0		

NICHOLS

NICHOLS ENVIRONMENTAL (CANADA) LTD.

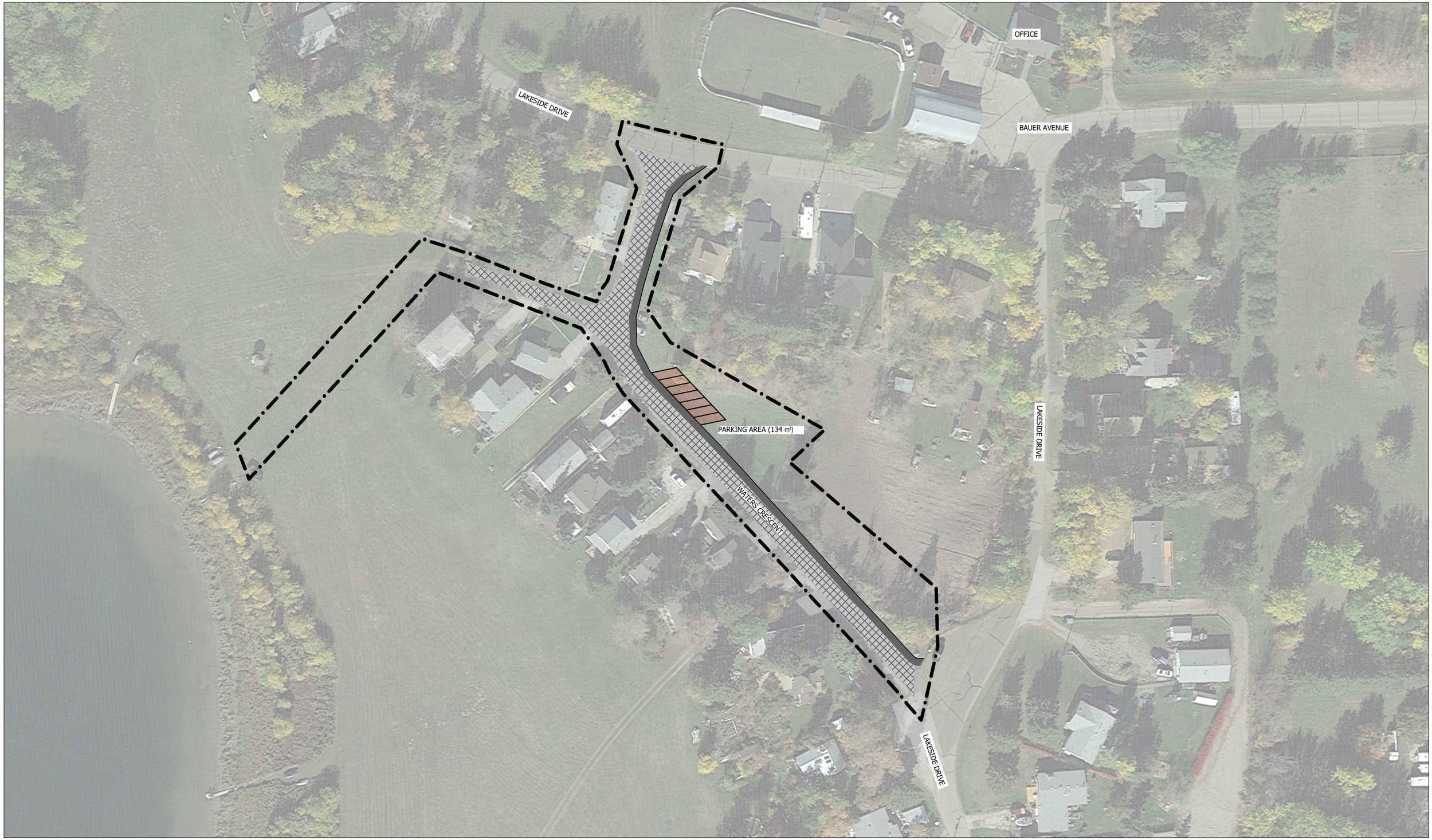

Legend:

- PROPOSED ROAD WIDENING
- PROPOSED ASPHALT OVERLAY
- PROPOSED PARKING LOT
- CONSTRUCTION BOUNDARY

REVISION LOG

REV	DATE	DESCRIPTION	DRAF.	CHKD.
A	29-Nov-2023	Issued for Internal Review	JG	DD/MD
0	21-Feb-2024	Issued for Tender	AH	DD/MD

SCALE 1:1000 (0 5 10 15 20 25m)	DRAWN: JG	APPROVED: MD	PROJECT: Road Widening & Drainage Improvements, Waters Crescent, Spring Lake, Alberta
DRAWING TITLE: Area Overview	PROJECT: 23-131-VSL	DATE: 21-Feb-2024	
	DRAWING: Figure 1	REVISION: 0	

CLIENT: Village of Spring Lake

NICHOLS ENVIRONMENTAL (CANADA) LTD.

NOTES
1. WHEN CULVERTS ARE REQUIRED THEY MUST BE C.S.P. CULVERTS AND BE THE FOLLOWING MINIMUM DIAMETERS
   RESIDENTIAL - 0.400m
   INDUSTRIAL - 0.500m
   - LENGTH WILL VARY WITH DEPTH OF FILL
   - CULVERT TO BE PLACED AT TOE OF BACKSLOPE
2. ALL DEMINSIONS SHOWN ARE IN METERS
3. MINIMUM APPROACH LENGTH - FROM EDGE OF ROAD SHOULDER TO R/W BOUNDARY

parkland county

RESIDENTIAL AND INDUSTRIAL APPROACHES

DATE DRAWN	SEPT 2008
DATE REVISED	DEC 2013
DRAWING NUMBER	7.12

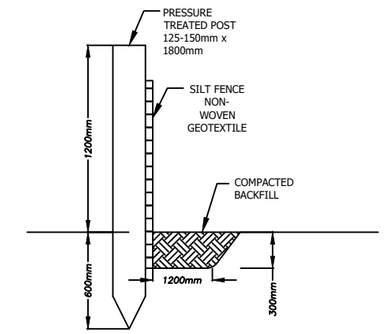

TYPICAL SILT FENCE LAYOUT
DETAIL A
*OR APPROVED EQUIVALENT

LEGEND:

- EXISTING ASPHALT
- PROPOSED ROAD WIDENING
- PROPOSED ASPHALT OVERLAY
- PROPOSED PARKING LOT
- RIP RAP
- Grading Slope 3:1
- CONSTRUCTION BOUNDARY
- EXISTING STORM CULVERT
- PROPOSED STORM CULVERT
- PROPOSED STORM MAIN
- O/H POWER — EXISTING OVERHEAD POWER
- 730.00 — EXISTING GROUND CONTOUR
- EXISTING PEDESTAL
- EXISTING POWERPOLE
- 730.69 EOA — PROPOSED GRADE (EDGE OF ASPHALT)
- EXISTING TELUS TRENCH
- GAS — EXISTING GAS LINE
- × 729.56 OG — EXISTING SPOT ELEVATION
- EXISTING WATER WELL

ALL EXISTING UTILITY LOCATIONS ARE APPROXIMATE. CONTRACTOR IS RESPONSIBLE TO CALL ALBERTA ONE AT 1-800-242-3447 AND SHAW CABLE AT 1-866-344-7429 TO HAVE ALL UTILITIES WITHIN THE CONSTRUCTION VICINITY LOCATED PRIOR TO ANY CONSTRUCTION COMMENCING.

USE, REPRODUCTION OR REVISION OF THIS DRAWING SET IS STRICTLY PROHIBITED WITHOUT THE WRITTEN PERMISSION OF NICHOLS ENVIRONMENTAL ANY DISCREPANCIES OR OMISSIONS SHALL BE REPORTED TO THE ENGINEER PRIOR TO COMMENCEMENT OF ANY WORK. THE DRAWING SET SHALL NOT BE SCALED. THIS PLAN IS NOT ISSUED FOR CONSTRUCTION UNLESS OTHERWISE NOTED.

REVISION LOG

REV	DATE	DESCRIPTION	DRAF.	CHKD.
A	29-Nov-2023	Issued for Internal Review	JG	DD/MD
0	21-Feb-2024	Issued for Tender	AH	DD/MD

SCALE	1:500
DRAWING TITLE	North Roadway Grading Plan
DRAWN	JG
APPROVED	MD
PROJECT	23-131-VSL
DATE	21-Feb-2024
DRAWING	Figure 2
REVISION	0
PROJECT	Road Widening & Drainage Improvements Waters Crescent Spring Lake, Alberta
CLIENT	Village of Spring Lake

NICHOLS ENVIRONMENTAL (CANADA) LTD.

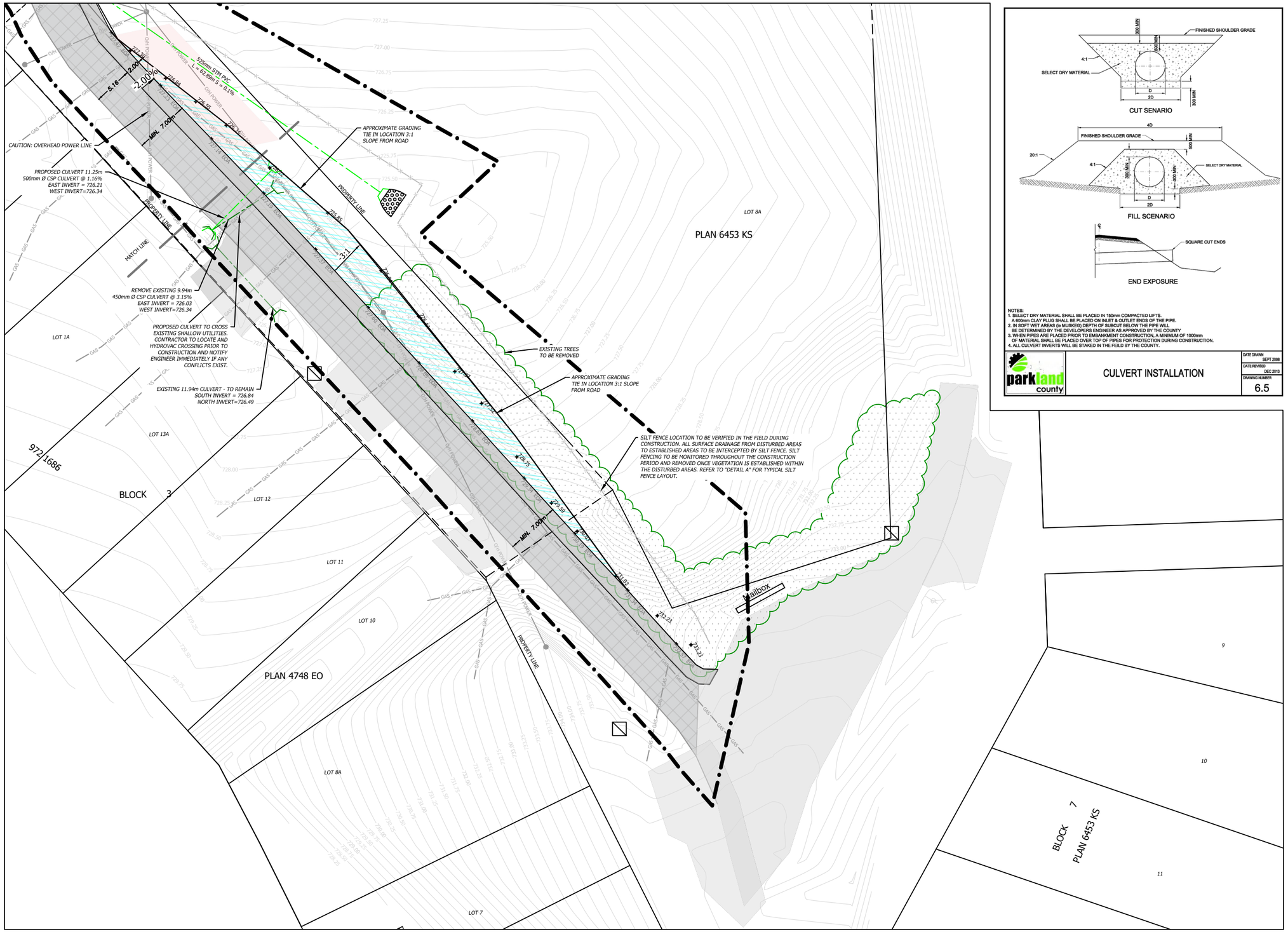

NOTES:
1. SELECT DRY MATERIAL SHALL BE PLACED IN 150mm COMPACTED LIFTS.
A 600mm CLAY PLUG SHALL BE PLACED ON INLET & OUTLET ENDS OF THE PIPE.
2. IN SOFT WET AREAS (ie MUSKEG) DEPTH OF SUBCUT BELOW THE PIPE WILL
BE DETERMINED BY THE DEVELOPER'S ENGINEER AS APPROVED BY THE COUNTY
3. WHEN PIPES ARE PLACED PRIOR TO EMBANKMENT CONSTRUCTION, A MINIMUM OF 1000mm
OF MATERIAL SHALL BE PLACED OVER TOP OF PIPES FOR PROTECTION DURING CONSTRUCTION.
4. ALL CULVERT INVERTS WILL BE STAKED IN THE FEILD BY THE COUNTY.

parkland county

CULVERT INSTALLATION

DATE DRAWN	SEPT 2008
DATE REVISED	DEC 2013
DRAWING NUMBER	6.5

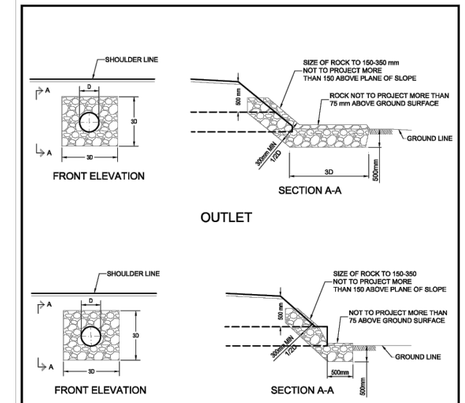

NOTES:
1. SELECT DRY MATERIAL SHALL BE PLACED IN 150mm COMPACTED LIFTS.
A 600mm CLAY PLUG SHALL BE PLACED ON INLET & OUTLET ENDS OF THE PIPE.
2. IN SOFT WET AREAS (ie MUSKEG) DEPTH OF SUBCUT BELOW THE PIPE WILL
BE DETERMINED BY THE DEVELOPER'S ENGINEER AS APPROVED BY THE COUNTY
3. WHEN PIPES ARE PLACED PRIOR TO EMBANKMENT CONSTRUCTION, A MINIMUM OF 1000mm
OF MATERIAL SHALL BE PLACED OVER TOP OF PIPES FOR PROTECTION DURING CONSTRUCTION.
4. ALL CULVERT INVERTS WILL BE STAKED IN THE FIELD AND REVIEWED BY THE COUNTY.

parkland county

CULVERT INSTALLATION
WITH RIP RAP
SIZE 400-1200 DIA

DATE DRAWN	SEPT 2008
DATE REVISED	DEC 2013
DRAWING NUMBER	6.7

LEGEND:

- EXISTING ASPHALT
- PROPOSED ROAD WIDENING
- PROPOSED ASPHALT OVERLAY
- PROPOSED PARKING LOT
- RIP RAP
- Grading Slope 3:1
- CONSTRUCTION BOUNDARY
- EXISTING STORM CULVERT
- PROPOSED STORM CULVERT
- PROPOSED STORM MAIN
- O/H POWER — EXISTING OVERHEAD POWER
- 730.00 — EXISTING GROUND CONTOUR
- EXISTING PEDESTAL
- EXISTING POWERPOLE
- 730.69 EOA — PROPOSED GRADE (EDGE OF ASPHALT)
- EXISTING TELUS TRENCH
- GAS — EXISTING GAS LINE
- × 729.56 OG — EXISTING SPOT ELEVATION
- EXISTING WATER WELL

ALL EXISTING UTILITY LOCATIONS ARE APPROXIMATE. CONTRACTOR IS RESPONSIBLE TO CALL ALBERTA ONE AT 1-800-242-3447 AND SHAW CABLE AT 1-866-344-7429 TO HAVE ALL UTILITIES WITHIN THE CONSTRUCTION VICINITY LOCATED PRIOR TO ANY CONSTRUCTION COMMENCING.

USE, REPRODUCTION OR REVISION OF THIS DRAWING SET IS STRICTLY PROHIBITED WITHOUT THE WRITTEN PERMISSION OF NICHOLS ENVIRONMENTAL ANY DISCREPANCIES OR OMISSIONS SHALL BE REPORTED TO THE ENGINEER PRIOR TO COMMENCEMENT OF ANY WORK. THE DRAWING SET SHALL NOT BE SCALED. THIS PLAN IS NOT ISSUED FOR CONSTRUCTION UNLESS OTHERWISE NOTED.

REVISION LOG

REV	DATE	DESCRIPTION	DRAF.	CHKD.
A	29-Nov-2023	Issued for Internal Review	JG	DD/MD
0	21-Feb-2024	Issued for Tender	AH	DD/MD

SCALE 1:500 (2.5 0 2 4 6 8 10m)	DRAWN: JG	APPROVED: MD	PROJECT: Road Widening & Drainage Improvements, Waters Crescent, Spring Lake, Alberta
DRAWING TITLE: South Roadway Grading Plan	PROJECT: 23-131-VSL	DATE: 21-Feb-2024	
	DRAWING: Figure 3	REVISION: 0	

CLIENT: Village of Spring Lake

NICHOLS ENVIRONMENTAL (CANADA) LTD.

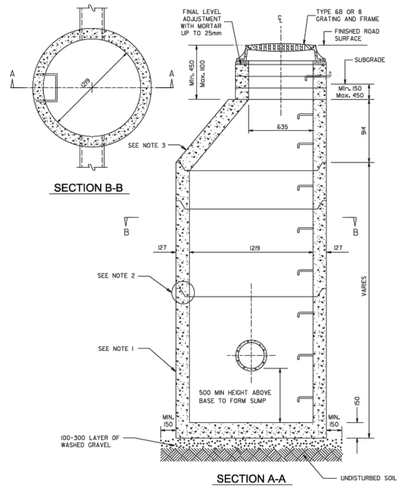

NOTES:
1. UNIT COULD BE MADE UP FROM TWO ITEMS (BASE AND BARREL).
2. OPPOSITE ORIENTATION OF JOINTS IS ACCEPTABLE.
3. 1200 x 635 SLAB TOP COULD BE USED INSTEAD OF CONE IN SHALLOW BURY INSTALLATION.

ALL DIMENSIONS ARE IN MILLIMETERS UNLESS OTHERWISE NOTED.

EPCOR

STANDARD 1200 CB MANHOLE WITH TYPE 6B OR 8 GRATING AND FRAME

DATE APPROVED	DRAWN BY	APPROVED	DRAWING NUMBER
JUNE 2020	JL		7011
SCALE NTS	CHECKED BY BK		

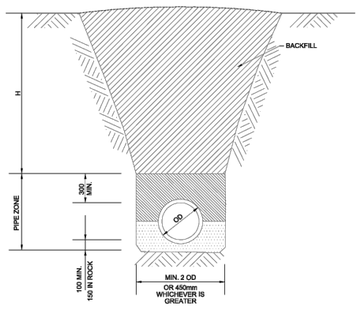

NOTES:
1. WHEN CUT BACK SLOPES ARE TO BE USED IN LIEU OF CAGES AND SHORING, THESE SLOPES ARE TO MEET REQUIREMENTS OF OCCUPATIONAL HEALTH & SAFETY ACT.
2. SEE SPECIFICATIONS FOR MINIMUM COVER ABOVE PIPE.
3. MIN. PIPE ZONE WIDTH IS SPECIFIED TO ALLOW PROPER PIPE ZONE COMPACTION.
4. OD = OUTSIDE PIPE DIAMETER.
5. FOR UNCOMPACTED BACKFILL, CROWN TRENCH BY 0.1 x H.

parkland county

UTILITY TRENCH

DATE DRAWN	DATE REVISED	DRAWING NUMBER
SEPT 2008	DEC 2013	3.7

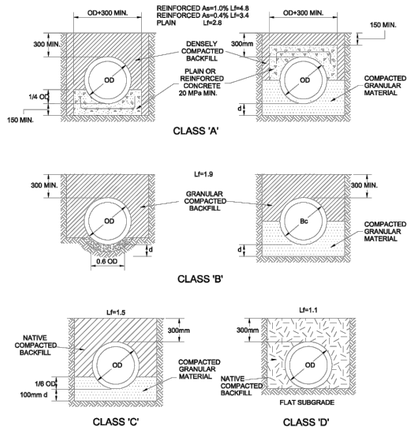

LEGEND:
OD = OUTSIDE PIPE DIAMETER
d = DEPTH OF BEDDING MATERIAL BELOW PIPE (100mm MIN., 150mm IN ROCK)
As = AREA OF TRANSVERSE STEEL IN THE CRADLE OR ARCH EXPRESSED AS A PERCENTAGE OF AREA OF CONCRETE AT INVERT OR CROWN.
Lf = LOAD FACTOR

parkland county

CLASSES OF PIPE BEDDING

DATE DRAWN	DATE REVISED	DRAWING NUMBER
SEPT 2008	DEC 2013	3.1

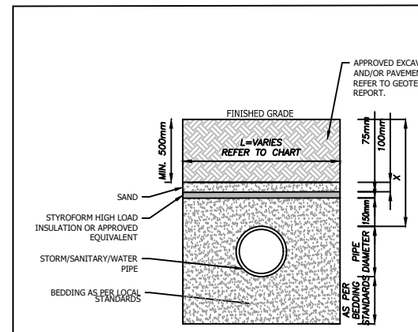

PIPE DIAMETER(Ø)	LENGTH OF INSULATION (L)
150	=5350-(2X)
200	=5400-(2X)
250	=5450-(2X)
300	=5500-(2X)
375	=5575-(2X)
450	=5650-(2X)
525	=5725-(2X)
600	=5800-(2X)
675	=5875-(2X)

NOTES:
- ALL DIMENSIONS IN MILLIMETERS UNLESS OTHERWISE SPECIFIED.
- X=COVER OF THE PIPE (mm)
- L=LENGTH OF INSULATION (mm)
- IF L EQUALS A NEGATIVE NUMBER, INSULATION IS NOT REQUIRED.

HORIZONTAL INSULATION OF NEW PIPE

NTS

LEGEND:

- EXISTING ASPHALT
- PROPOSED ROAD WIDENING
- PROPOSED ASPHALT OVERLAY
- PROPOSED PARKING LOT
- RIP RAP
- CONSTRUCTION BOUNDARY
- EXISTING STORM CULVERT
- PROPOSED STORM CULVERT
- PROPOSED STORM MAIN
- O/H POWER — EXISTING OVERHEAD POWER
- 730.00 — EXISTING GROUND CONTOUR
- EXISTING PEDESTAL
- EXISTING POWERPOLE
- 730.69 EOA — PROPOSED GRADE (EDGE OF ASPHALT)
- EXISTING TELUS TRENCH
- GAS — EXISTING GAS LINE
- × 729.56 OG — EXISTING SPOT ELEVATION
- EXISTING WATER WELL

ALL EXISTING UTILITY LOCATIONS ARE APPROXIMATE. CONTRACTOR IS RESPONSIBLE TO CALL ALBERTA ONE AT 1-800-242-3447 AND SHAW CABLE AT 1-866-344-7429 TO HAVE ALL UTILITIES WITHIN THE CONSTRUCTION VICINITY LOCATED PRIOR TO ANY CONSTRUCTION COMMENCING.

USE, REPRODUCTION OR REVISION OF THIS DRAWING SET IS STRICTLY PROHIBITED WITHOUT THE WRITTEN PERMISSION OF NICHOLS ENVIRONMENTAL. ANY DISCREPANCIES OR OMISSIONS SHALL BE REPORTED TO THE ENGINEER PRIOR TO COMMENCEMENT OF ANY WORK. THE DRAWING SET SHALL NOT BE SCALED. THIS PLAN IS NOT ISSUED FOR CONSTRUCTION UNLESS OTHERWISE NOTED.

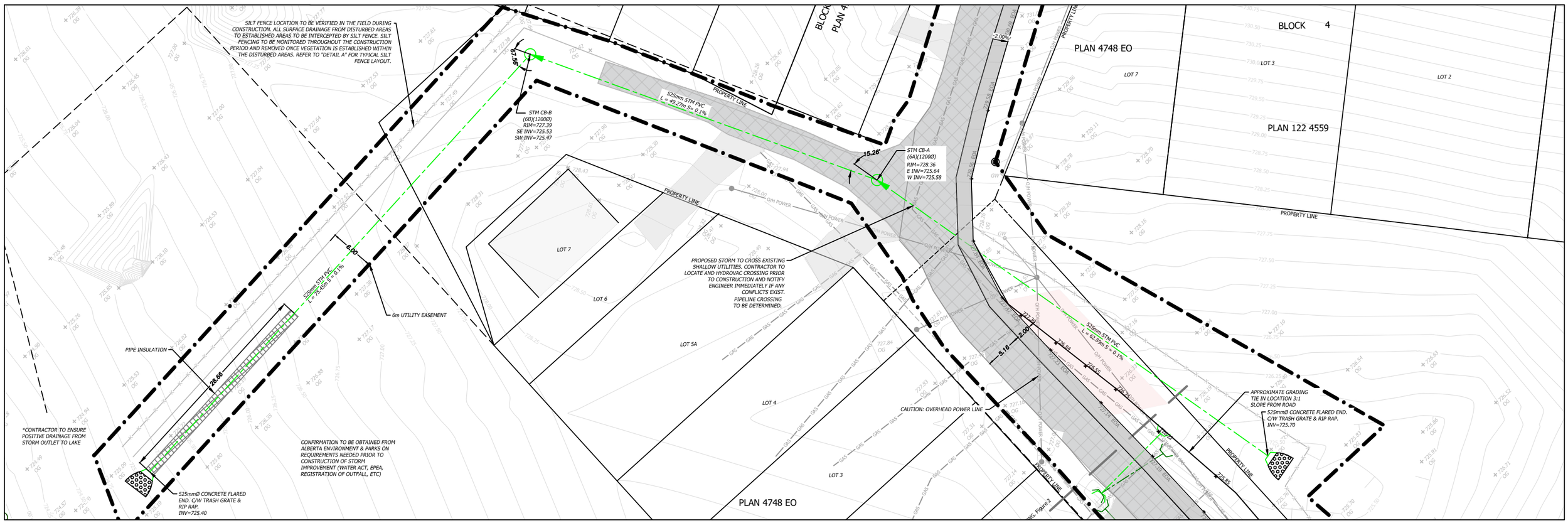

REVISION LOG

REV	DATE	DESCRIPTION	DRAF.	CHKD.
A	29-Nov-2023	Issued for Internal Review	JG	DD/MD
0	21-Feb-2024	Issued for Tender	AH	DD/MD

SCALE 1:500	DRAWN	APPROVED	PROJECT	CLIENT
DRAWING TITLE: Underground Stormwater Plan	JG	MD	Road Widening & Drainage Improvements Waters Crescent Spring Lake, Alberta	Village of Spring Lake
	PROJECT: 23-131-VSL	DATE: 21-Feb-2024		
	DRAWING: Figure 4	REVISION: 0		

NICHOLS ENVIRONMENTAL (CANADA) LTD.

ALL EXISTING UTILITY LOCATIONS ARE APPROXIMATE. CONTRACTOR IS RESPONSIBLE TO CALL ALBERTA ONE AT 1-800-242-3447 AND SHAW CABLE AT 1-866-344-7429 TO HAVE ALL UTILITIES WITHIN THE CONSTRUCTION VICINITY LOCATED PRIOR TO ANY CONSTRUCTION COMMENCING.

USE, REPRODUCTION OR REVISION OF THIS DRAWING SET IS STRICTLY PROHIBITED WITHOUT THE WRITTEN PERMISSION OF NICHOLS ENVIRONMENTAL ANY DISCREPANCIES OR OMISSIONS SHALL BE REPORTED TO THE ENGINEER PRIOR TO COMMENCEMENT OF ANY WORK. THE DRAWING SET SHALL NOT BE SCALED. THIS PLAN IS NOT ISSUED FOR CONSTRUCTION UNLESS OTHERWISE NOTED.

REVISION LOG

REV	DATE	DESCRIPTION	DRAF.	CHKD.
A	29-Nov-2023	Issued for Internal Review	JG	DD/MD
0	21-Feb-2024	Issued for Tender	AH	DD/MD

SCALE 1:150	DRAWN	APPROVED	PROJECT	CLIENT
0 1 2 3 4m	JG	MD	Road Widening & Drainage Improvements Waters Crescent Spring Lake, Alberta	Village of Spring Lake
DRAWING TITLE	PROJECT	DATE		
Parking Lot Overview	23-131-VSL	21-Feb-2024		
	DRAWING	REVISION		
	Figure 5	0		

NICHOLS ENVIRONMENTAL (CANADA) LTD.

Legend:

Construction Boundary

REVISION LOG				
REV	DATE	DESCRIPTION	DRAF.	CHKD.
A	29-Jan-2024	Issued for Internal Review	JG	DD/MD
0	21-Feb-2024	Issued for Tender	AH	DD/MD

SCALE 1:2000

-10 0 10 20 30 40m

DRAWING TITLE

Lakeside Drive Additional Asphalt Area Overview

DRAWN	APPROVED
AH	DD
PROJECT	**DATE**
23-131-VSL	21-Feb-2024
DRAWING	**REVISION**
Figure 6	0

PROJECT

Additional Asphalt Area
Lakeside Drive
Village of Spring Lake, Alberta

CLIENT

Village of Spring Lake

NICHOLS

NICHOLS ENVIRONMENTAL (CANADA) LTD.

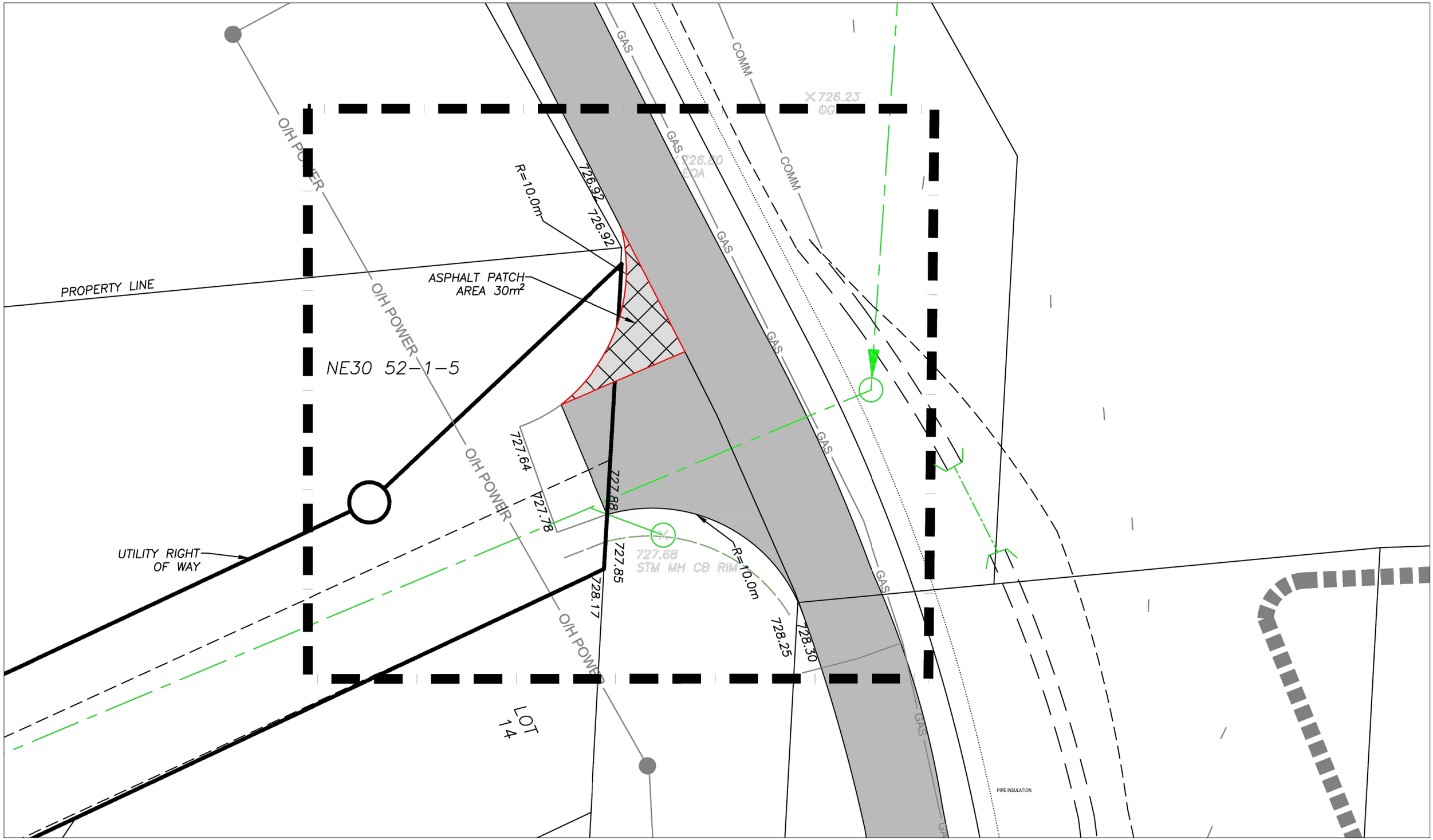

Legend:

- PROPOSED ASPHALT OVERLAY
- EXISTING ASPHALT
- CONSTRUCTION BOUNDARY

REVISION LOG

REV	DATE	DESCRIPTION	DRAF.	CHKD.
A	29-Jan-2024	Issued for Internal Review	JG	DD/MD
0	21-Feb-2024	Issued for Tender	AH	DD/MD

SCALE 1:200 (0 1.25 2.5 3.75 5m)	DRAWN: AH	APPROVED: DD	PROJECT: Additional Asphalt Area, Lakeside Drive, Village of Spring Lake, Alberta	CLIENT: Village of Spring Lake
DRAWING TITLE: Lakeside Drive Additional Asphalt Area	PROJECT: 23-131-VSL	DATE: 21-Feb-2024		
	DRAWING: Figure 7	REVISION: 0		

NICHOLS

NICHOLS ENVIRONMENTAL (CANADA) LTD.